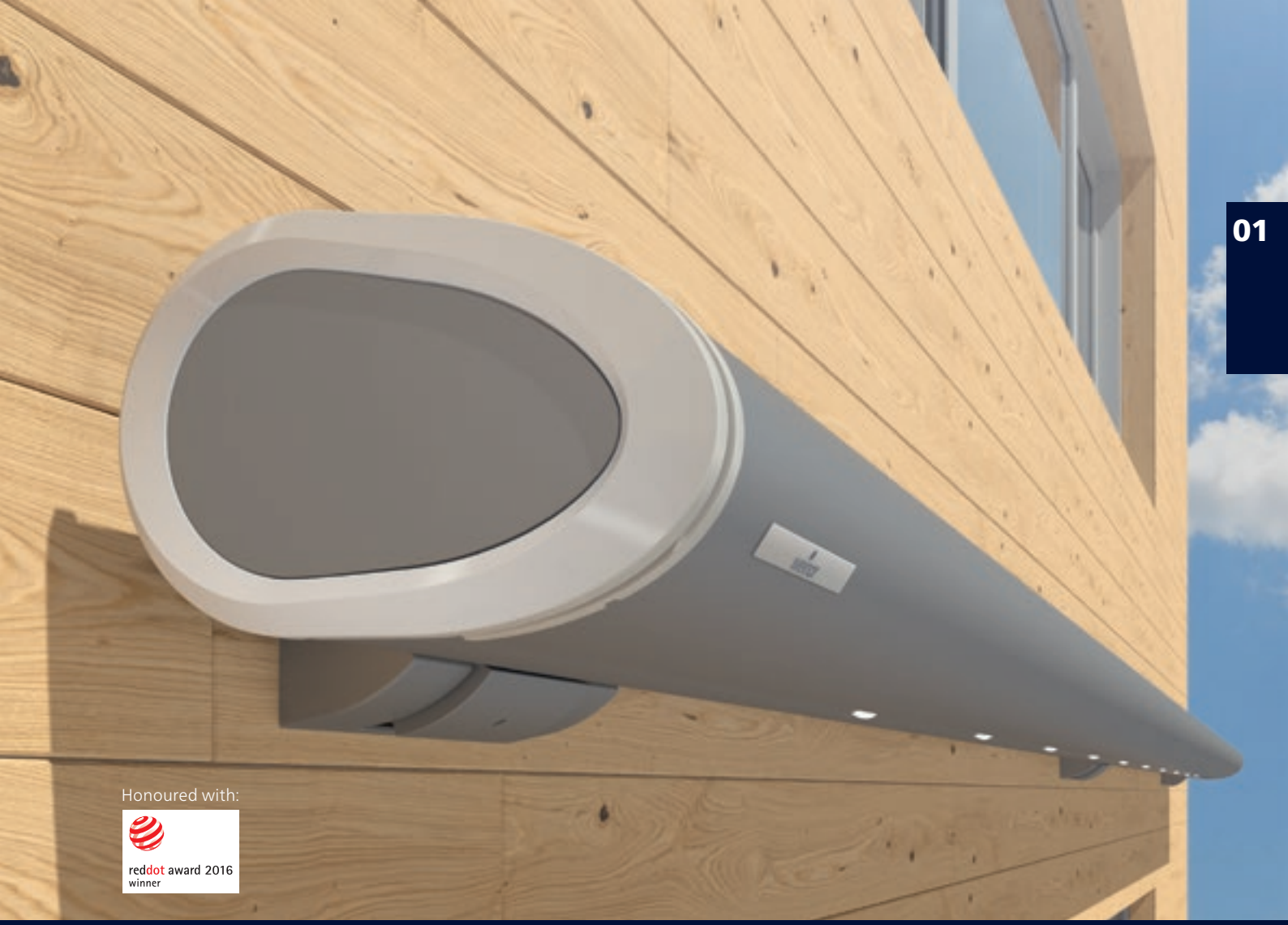

Honoured with:

reddot award 2016
winner

Cassette awning

Semina Life

Semina Life LED | VarioShade Valance

Semina Life is the all-rounder among cassette-awnings. It impresses due to its modern, fresh design combined with weinor's technology tried and tested over many years. As it is such superb value for money the **Semina Life** is a real alternative to the semi-cassette. Its many technical highlights provide superb comfort and a long operating life. Whether young or old, modern or traditional: **Semina Life** is always just the right choice – in a class of its own!

Modern design covers:
The stainless steel look headplate rings and drop profile endcaps can be combined with the required frame colour (also available in the same colour as the awning)

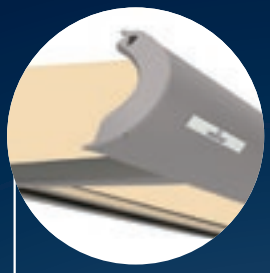

Integrated rain gutter:
Water drain

Stable, elegant brackets:
With easy access to adjust the inclination

Wall mounting

Ceiling mounting

Rafter mounting

Semina Life LED:
Integrated into the cassette

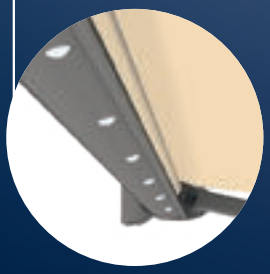

Semina Life Highlights

VarioShade Valance option:
Vertical privacy and sun protection

Both the awning and VarioShade Valance are available either with gear drive or motor drive.

weinor LongLife arm:
Very durable and low-noise

Semina Life Benefits

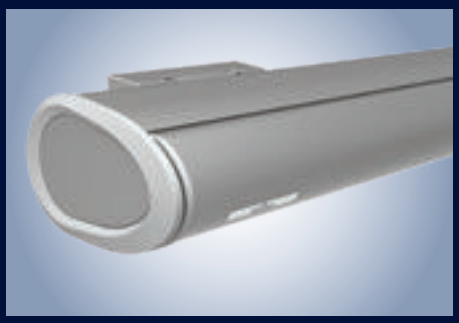

Cassette-awning – youthful design with state-of-the-art technology

The Semina Life cassette is chic and offers protection against the weather.

- Innovative closing of the awning causing practically no wear at all thanks to the cushioned infeed rollers
- Beautifully shaped stainless steel look aluminium headplate rings and drop profile endcaps (also available in the same colour as the awning)

Semina Life LED – cassette with integrated LED lighting

The LED spotlights integrated into the cassette produce atmospheric lighting on the patio.

- 30,000 LED light hours with lowest energy consumption (85% electricity saving compared to halogen technology)
- Dimmable when used with BiConnect or Somfy io-homecontrol® radio control

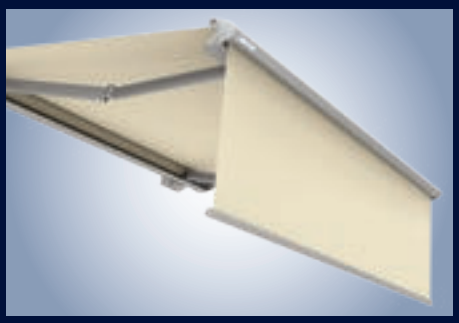

VarioShade Valance – vertical privacy and sun protection

The VarioShade Valance is elegantly integrated into the awning's drop profile. It provides privacy and glare protection even with a low-lying sun.

- Continuously extendable up to 210 ççm
- Patented weinor OptiFlow-System® to keep fabric ideally positioned and to close the drop profile safely

Two-part bracket cover – simple angle of pitch adjustment

The lower part of the beautifully shaped cover can be easily removed. As a result there is very easy access to the screws for the angle of pitch adjustment. The pitch in the brackets is preset at the factory for easy installation.

Semina Life Technology

Semina Life versions	Semina Life	Semina Life LED
Technology		
Max. width	650 cm	650 cm
Max. projection	400 cm	400 cm
Cassette size (w x h) incl. standard bracket	307 mm x 194 mm	307 mm x 194 mm
Gear drive	○	—
Motor drive	● as standard	● as standard
Angle of pitch on awning	5° to 25° (with projection from 360 cm 7° to 20°)	5° to 25° (with projection from 360 cm 7° to 20°)
Installation alternatives	can be installed on walls, ceilings and rafters	
LED lighting (separate spotlights)	—	● integrated into the awning's cassette
OptiNut pipe	● as standard	● as standard
LongLife arm	● as standard	● as standard
VarioShade Valance option		
Max. width	600 cm	600 cm
Max. awning projection	350 cm	350 cm
Cassette size (w x h)	367 x 194 mm	367 x 194 mm
Gear drive	○	○
Motor drive	● as standard	● as standard
Angle of pitch on awning	10° to 20°	10° to 20°
VarioShade Valance projection (h)	100 cm, 150 cm, 210 cm	100 cm, 150 cm, 210 cm
Patented weinor Opti-Flow-System®	● as standard	● as standard
Accessories		
Tempura heating system	○ bracket with special attachment	○ bracket with special attachment
Tempura Quadra heating system	○	○
BiSens Agido-3V product protection sensor	○	○
Controls		
Radio control	○	○
No remote	●	●
Weather sensors		
Sun/wind sensor	○	○
Sun/wind sensor solar powered	○	○
Sun/wind/rain sensor	○	○
Quality		
Tested up to	wind resistance class 1 according to DIN 13561 (wind strength 5 on the Beaufort scale)	

● standard ○ optional — unavailable

Semina Life LED

LED lighting – 30,000 hours of lighting with lowest energy consumption

Select LED components for top weinor quality:

- Atmospheric light thanks to special glass lenses
- Visually integrated into the cassette
- Lighting remains on even when awning is retracted
- Highly energy-efficient
- Operating life of 30,000 hours
- Dimmable when used with BiConnect or Somfy io-homecontrol® radio control
- Easy to service: simply replace individual LED lights without dismounting the awning

Integrated LED lighting

Awning width in cm	Number of separate LED spotlights	Awning width in cm	Number of separate LED spotlights
up to 150	2	381 – 440	7
151 – 220	3	441 – 490	8
221 – 270	4	491 – 550	9
271 – 330	5	551 – 650	10
331 – 380	6		

Semina Life VarioShade Valance

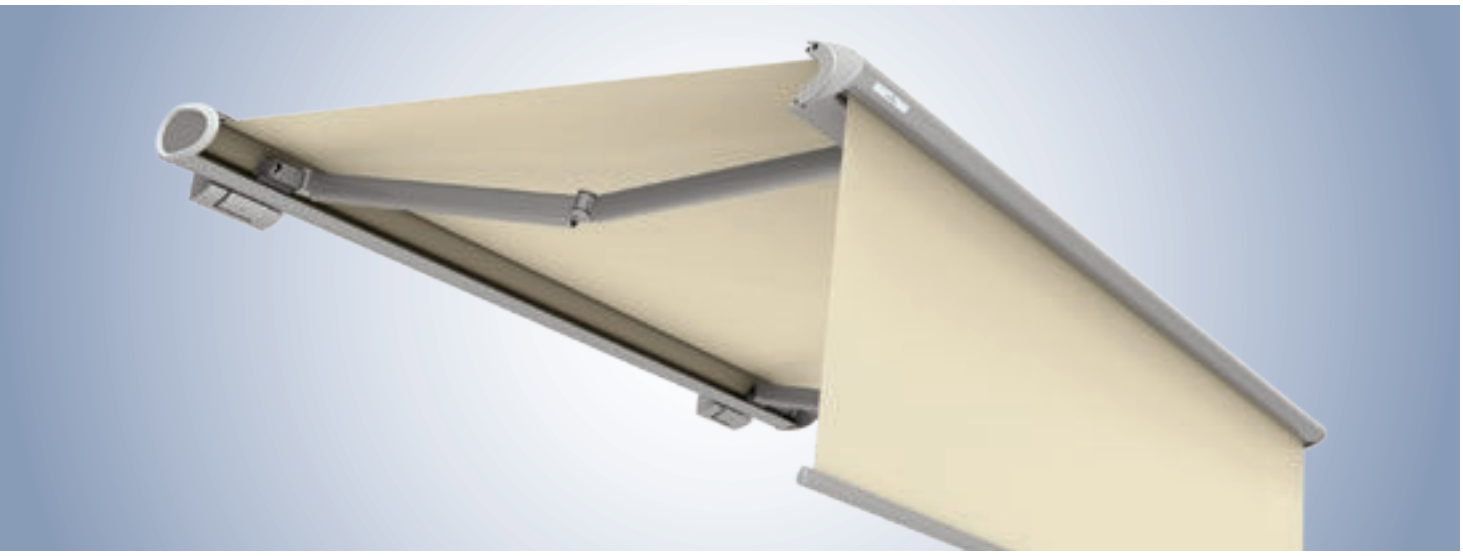

More privacy thanks to vertical privacy and sun screen (optional)

The gear-operated or motorised vertical awning is elegantly integrated into the awning's front profile.

- Glare protection and privacy shield up to a maximum valance height of 210 cm
- Extends to any length
- Use VarioShade Valance with an awning angle of pitch between 10° and 20°
- VarioShade Valance cannot be retrofitted
- VarioShade Valance with motor only with motorised awning

Motorised

Gear drive

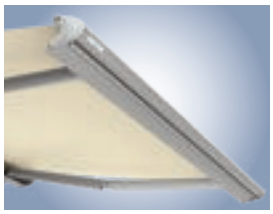

Closed

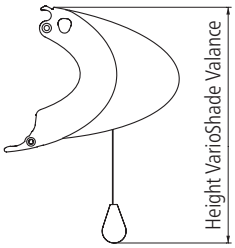

Maximum awning size for VarioShade Valance

Motorised main drive			
Width	600 cm	Projection	350 cm
Gear main drive			
Width	500 cm	Projection	350 cm
Width	600 cm	Projection	300 cm

V-shaped waves
On wider units and units wich are mounted with special facades technology (distance tube, spreader plates, into insulated walls) symmetric v-shaped waves can occur from the sides. Reason for this, are the weight and structure on the fabric and the bending of the roller tube, which are transferring additional load onto the main brackets and the special fixings.

Available fabrics for the VarioShade Valance

	Soltis® 86, 92	Soltis® 86, 92	Acrylic			Polyester		StarScreen	Fibreglass screen
Pattern	unicolour	unicolour	stripes	unicolour	uni	stripes	unicolour	unicolour	
Roll width	177 cm	267 cm	120 cm	120 cm	250 cm**	120 cm	120 cm	325 cm	max. 320 cm*
Valance length									
100 cm	N	N	L	N	–	L	N	N	N
150 cm	N	N	–	–	N	–	–	N	N
210 cm	Q	N	–	–	N	–	–	N	–

N Seamless: seamless fabric; structure of fabric runs crosswise to structure of awning fabric
Q Transverse seam: fabric with transverse seam (glued); either in top or bottom third as desired; structure of fabric runs diagonally to structure of awning fabric
L Longitudinal seam: structure of fabric runs longitudinally to structure of awning fabric
– Not available
* Max. roll widths are stipulated in the collection brochure
** Seamless acrylic fabric: 3-509-250, 3-708-250, 3-716-250, 3-719-250, 3-720-250

Please note: On the gear-driven VarioShade Valance, it is possible that the VarioShade Valance bottom rail will close unevenly.

Semina Life Controls

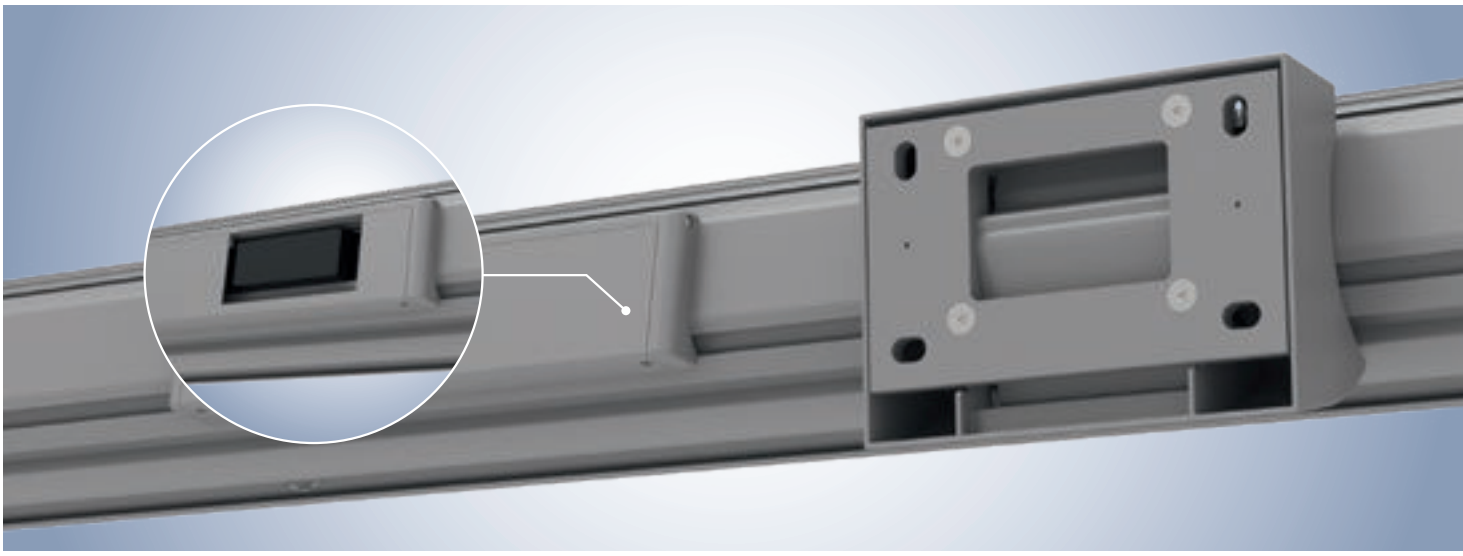

The receiver, power supply pack and other electrical components, such as the BiConnect receiver are integrated into the cassette
The transformer box can be easily be opened for servicing purposes. The receiver, which is separate from the drive, is then easily accessible.

Exclusive retraction protection
- Co-ordinated retraction: first the VarioShade Valance, then the awning
- To make sure nothing gets knocked over on the terrace

weinor BiConnect radio technology

Product	Electronics	BiConnect control	Remote receiver	Transmitter
Semina Life	Semina Life drive	• BiRec receiver integrated into cassette	BiRec MA-K	• BiEasy 1M/5M/15M Go! hand transmitter • 1MW-3V wall transmitter
Semina Life LED	Semina Life drive and LED lighting	• BiRec combi-receiver for main drive and LED spotlights (with integrated power supply pack) integrated into cassette • Dimmable LED	BiRec MLED	• BiEasy 5M/15M Go! hand transmitter
Semina Life VarioShade Valance	Semina Life and VarioShade Valance drive	• BiRec combi-receiver for main drive and VarioShade Valance drive integrated into cassette • Table clearing protection • Gradual soft stop	BiRec MVLED	• BiEasy 5M/15M Go! hand transmitter
Semina Life LED VarioShade Valance	Semina Life and VarioShade Valance drive and LED lighting	• BiRec combi-receiver for main drive, VarioShade Valance drive and LED spotlights (with integrated power supply pack) integrated into cassette • Dimmable LED • Table clearing protection	BiRec MVLED	• BiEasy 5M/15M Go! hand transmitter
Accessories (optional)	Tempura/Tempura Quadra heating system	• Dimmable, additional receiver required • Installation of the reciever in the design bar provided for this purpose or the Tempura Quadra box	BiRec HD	• BiEasy 5M/15M Go! hand transmitter

Requires: awning with BiConnect remote control and sensors require a BiEasy 1M, 5M or 15M Go!

Somfy io-homecontrol® radio technology

Product	Electronics	Somfy io-homecontrol control	Remote receiver	Transmitter
Semina Life	Semina Life drive	• Somfy io remote-controlled motor integrated into cassette	Somfy io remote-controlled motor	• Situo 1 io Pure II/Situo 5 io Pure II/Situo 5 Variation A/M io Pure II hand transmitter • Smoove 1 io Pure Shine wall transmitter
Semina Life LED	Semina Life drive and LED lighting	• Somfy io remote-controlled motor integrated into cassette • Additional Somfy receiver for the LED spot-lights (with downstream power supply pack) integrated into cassette • LED dimmable	Somfy io remote-controlled motor and io Lighting Receiver Variation (dimmable)	• Situo 5 io Pure II/Situo 5 Variation A/M io Pure II hand transmitter
Semina Life VarioShade Valance	Semina Life and VarioShade Valance drive	• Somfy io remote-controlled motor integrated into cassette and drop profile • No retraction protection in windy conditions	Somfy io remote-controlled motors	• Situo 5 io Pure II/Situo 5 Variation A/M io Pure II hand transmitter
Semina Life LED VarioShade Valance	Semina Life and VarioShade Valance drive and LED lighting	• Somfy io remote-controlled motor integrated into cassette and drop profile • Additional Somfy receiver for the LED spot-lights (with downstream power supply pack) integrated into cassette • LED dimmable • No retraction protection in windy conditions	Somfy io remote-controlled motor and io Lighting Receiver Variation (dimmable)	• Situo 5 io Pure II/Situo 5 Variation A/M io Pure II hand transmitter
Accessories (optional)	Tempura/Tempura Quadra heating system	• Dimmable, additional receiver required • Installation of the reciever in the design bar provided for this purpose or the Tempura Quadra box	Heating Receiver Variation io 1.5 kW STAS3/STAK3 (dimmable)	• Situo 5 io Pure II/Situo 5 Variation A/M io Pure II hand transmitter • Smoove 1 io Pure Shine wall transmitter

Note: For Somfy io in combination with LED, two transformer boxes are used.

Somfy RTS radio technology

Product	Electronics	Somfy RTS control	Remote receiver	Transmitter
Semina Life	Semina Life drive	• Somfy RTS remote-controlled motor integrated into cassette	Somfy RTS remote-controlled motor	• Situo 1 RTS Pure II/Situo 1 Soliris RTS Pure II/Situo 5 RTS Pure II/Situo 5 Soliris RTS Pure II hand transmitter • Smoove 1 RTS Pure Shine wall transmitter
Semina Life LED	Semina Life drive and LED lighting	• Somfy RTS remote-controlled motor integrated into cassette • Additional Somfy receiver for the LED spot-lights (with downstream power supply pack) integrated into cassette • LED not dimmable	Somfy RTS remote-controlled motor and Lighting Slim Receiver RTS	• Situo 5 RTS Pure II/Situo 5 Soliris RTS Pure II hand transmitter
Semina Life VarioShade Valance	Semina Life and VarioShade Valance drive	• Somfy RTS remote-controlled motor integrated into cassette • Additional Somfy receiver for VarioShade Valance drive integrated into cassette • No retraction protection in windy conditions	Somfy RTS remote-controlled motor and Universal Receiver RTS	• Situo 5 RTS Pure II/Situo 5 Soliris RTS Pure II hand transmitter
Semina Life LED VarioShade Valance	Semina Life and VarioShade Valance drive and LED lighting	• Additional Somfy receiver for VarioShade Valance drive and LED spotlights (with down-stream power supply pack) integrated into cassette • LED not dimmable • No retraction protection in windy conditions	Somfy RTS remote-controlled motor, Universal Receiver RTS and Lighting Slim Receiver RTS	• Situo 5 RTS Pure II/Situo 5 Soliris RTS Pure II hand transmitter

Note: For Somfy RTS in combination with LED and VarioShade Valance, two transformer boxes are used.

Hard wired with Somfy control

Product	Electronics	Hard wired Somfy control	Control
Semina Life	Semina Life drive	• Somfy control for awning drive	e.g. Soliris Smoove Uno
Semina Life LED	Semina Life drive and LED lighting	• Somfy control for awning drive • Switch on site for the LED spotlights • LED power supply pack integrated into the cassette • LED not dimmable	e.g. Soliris Smoove Uno and suitable light switch (on site)
Semina Life VarioShade Valance	Semina Life and VarioShade Valance drive	• Somfy control for awning drive • Switch on site for the VarioShade Valance drive • No retraction protection in windy conditions	e.g. Soliris Smoove Uno and suitable double rocker switch (on site)
Semina Life LED VarioShade Valance	Semina Life and VarioShade Valance drive and LED lighting	• Somfy control for awning drive • Switch on site for the VarioShade Valance drive • No retraction protection in windy conditions • Switch on site for the LED spotlights • LED power supply pack integrated into the cassette • LED not dimmable	e.g. Soliris Smoove Uno, and suitable double rocker switch and light switch (on site)
Accessories (optional)	Tempura/Tempura Quadra heating system	• Not dimmable	Suitable switch (on site)

Hard wired (existing switch/power supply on site)

Product	Electronics	Hard wired control	Control
Semina Life	Semina Life drive	• Awning switch for the awning drive	e.g. double rocker switch switch (on site)
Semina Life LED	Semina Life drive and LED lighting	• Awning switch for the awning drive • Switch on site for the LED spotlightss • LED power supply pack integrated into the cassette • LED not dimmable	e.g. double rocker switch and suitable light switch (on site)
Semina Life VarioShade Valance	Semina Life and VarioShade Valance drive	• Awning switch for the awning drive • Switch on site for the VarioShade Valance drive • No retraction protection in windy conditions	e.g. 2 double rocker switches (on site)
Semina Life LED VarioShade Valance	Semina Life and VarioShade Valance drive and LED lighting	• Awning switch for the awning drive • Switch on site for the VarioShade Valance drive • No retraction protection in windy conditions • Switch on site for the LED spotlights • LED power supply pack integrated into the cassette • LED not dimmable	e.g. 2 double rocker switches and suitable light switch (on site)
Accessories (optional)	Tempura/Tempura Quadra heating system	• Not dimmable	Suitable switch (on site)

Note:
Please see the "Accessories" technical brochure for further details regarding the drive and control.

Some options are subject to a surcharge. For prices, please refer to the weinor awnings price list.

Gear drive (optional)

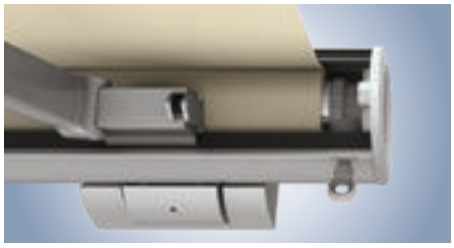

The Semina Life can of course be extended and retracted using a gear handle too (with a max. projection of 350 cm). This option is recommended whenever it is hard to connect to an electrical power source on the site or if the awning is not frequently used.

- The Semina Life has a universal bevel gear system.
- End stop adjustable from outside
- Tested according to DIN EN 14203
- Freewheel device when extended

Gear drive installation options based on the awning's type of installation

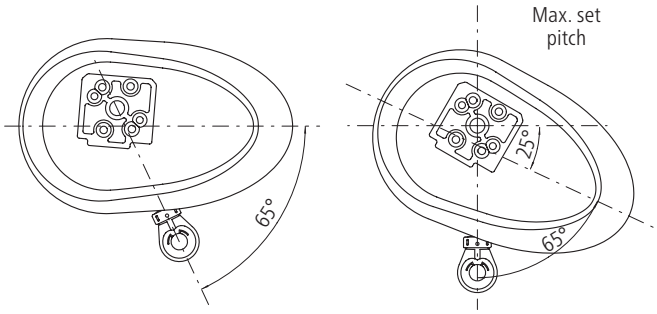

Standard gear outlet with wall mounting

Gear drive installation options based on the awning's type of installation

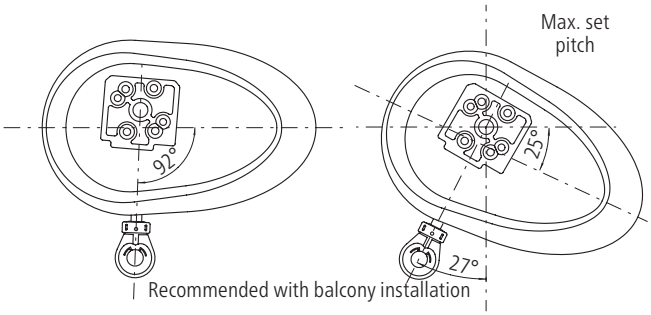

Gear outlet with ceiling/balcony installation

Tempura heating system (optional)

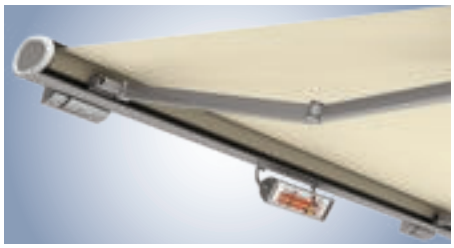

The perfect combination: Semina Life with Tempura heating system, VarioShade Valance and BiConnect*:

- Automated retraction with BiConnect: first the VarioShade Valance, then the awning
- As a result, the VarioShade Valance is protected from the material being damaged due to overheating by the Tempura heating system

Please note:
The Tempura's angle of pitch is restricted to 15° as standard. (This restriction is to avoid the wall being heated up too much by the Tempura.) The grub screw, which restricts the angle of pitch, can be removed if the Semina Life is adjusted up to 10° at the most. Then it is possible to adjust the Tempura's angle of pitch up to 30°.

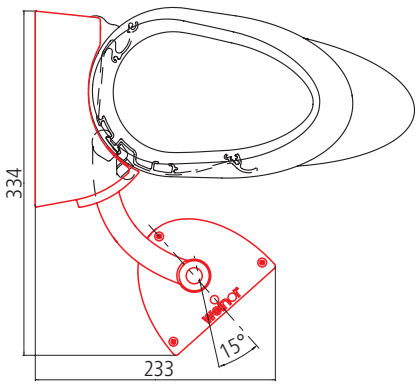

* The heating may not be attached to awnings with VarioShade Valance. Unless a control is used which ensures that the awning is always extended first and then the VarioShade Valance and that the VarioShade Valance is always retracted first before the awning.
In this way safety clearances are always adhered to.

Semina Life Roller support

Semina Life: wall mounting with centre bracket and roller support

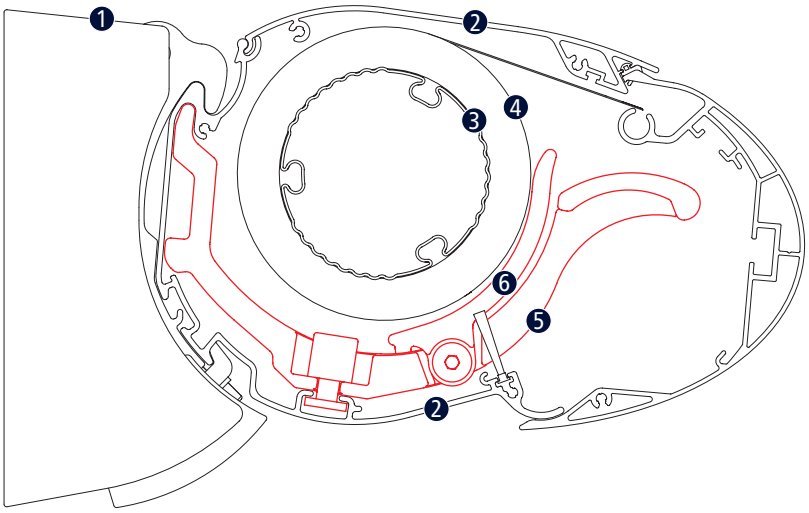

1 Centre bracket (wall bracket)
2 Cassette
3 Fabric roller bearing
4 Fabric rolls
5 Roller support
6 Sliding support bearing

Semina Life centre bracket: wall mounting (rear view)

Semina Life centre bracket: roof mounting (rear view)

Semina Life centre bracket: rafter mounting with rafter bracket (rear view)

Notes:

- From a width of 551 cm or more, a roller support and centre bracket is used in the middle
- The sliding support bearing is preassembled and can be adjusted to the size of the fabric roll accordingly
- Support of load against the wall or roof by means of simple screw fastening
- For widths of 551 cm or more you must use the centre bracket provided. This has a slightly different adjustment mechanism to the standard wall bracket. For widths below 551 cm we generally recommend not using a centre bracket unless you feel it is absolutely necessary, as the standard wall brackets are suffiecient to securely mount the awning.

Semina Life Planning

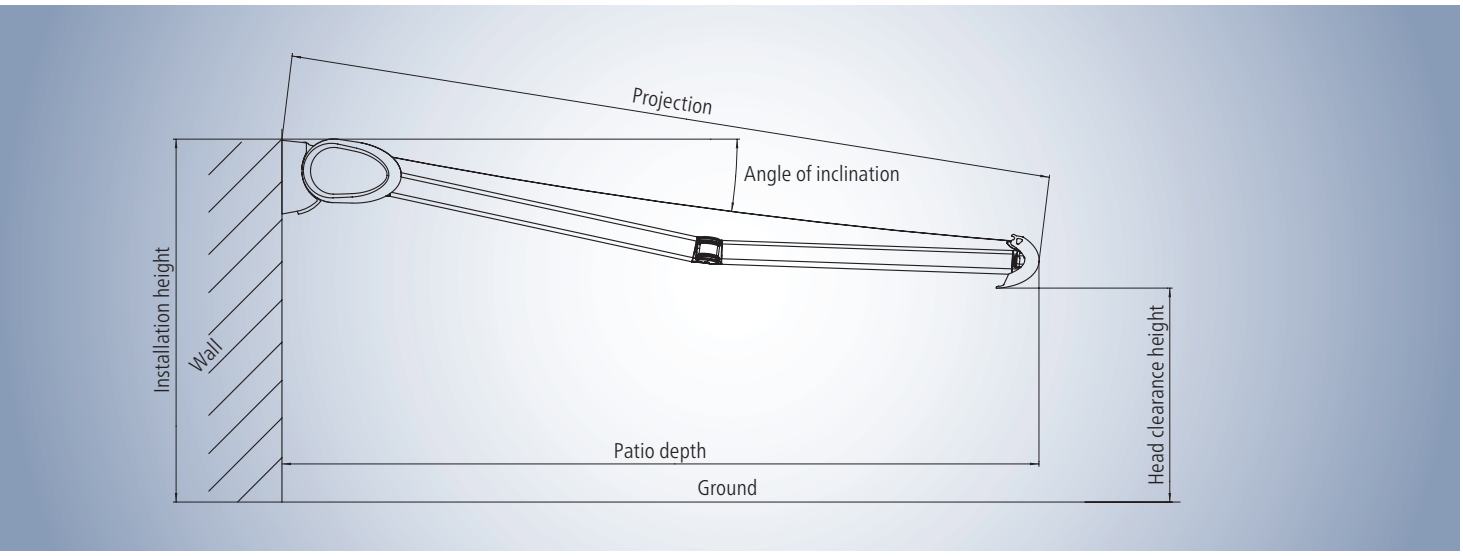

Site measurements – determining the projection and head clearance height

- Find the projection by looking in the "Projection" table for the terrace depth.
- Using the projection from the table and the required angle of inclination, consult the "head clearance height" table for the head clearance height. This head clearance height refers to an installation height of 300 cm.
- Add/subtract the difference between 300 cm and the actual installation height to/from the head clearance height in the table.

Determining the projection

Angle of pitch	Terrace depth in cm					
	150	200	250	300	350	400
5°	160	210	260	310	360	400
15°	160	210	260	320	370	–
25°	170	230	280	340	390	–

Projection in cm (rounded figures)

This table can be used to find the awning projection for any given horizontal patio depth.

Determining the head clearance height

Angle of pitch	Projection in cm					
	150	200	250	300	350	400
5°	276	272	267	263	258	254
15°	250	237	224	211	198	185
25°	226	204	183	162	141	120

Head clearance height in cm (rounded figures)

This table is used to find the head clearance heights for various projections when the angle of inclination is 5°, 15° or 25°.
This table is based on the example of an installation height of 300 cm (upper edge of awning).

Wall bracket

Sizes and bracket recommendations

Wall mounting on pressure-resistant surface
Minimum number of required wall brackets so that the function of the awning is ensured, regardless of the mounting surface. Selection of the brackets using the weinor bracket overview and using the maximum extraction forces of the fixings used!

Width in cm	Diagonal in 10 cm steps					
	up to 150	160-200	210-250	260-300	310-350	360-400
up to 200	2					
201-250	2	2				
251-300	2	2	2			
301-350	2	2	2	2		
351-400	2	2	2	2	2	
401-450	2	2	2	2	2	2
451-500	2	2	2	2	2	2
501-550	2	2	2	2	2	2
551-600	2+1	2+1	2+1	2+1	2+1	2+1
601-650	2+1	2+1	2+1	2+1	2+1	2+1

2	2 x wall bracket 250 mm
2+1	3 x wall bracket 250 mm + 1 x centre bracket 250 mm

Use of central bracket dependent on:
Width ≥ 551 cm

Observe size limits; unit must have X more width than projection:

- 250 mm wall bracket: X = 42 cm
- 430 mm wall bracket: X = 60 cm

Position of wall brackets and Semina Life cassette

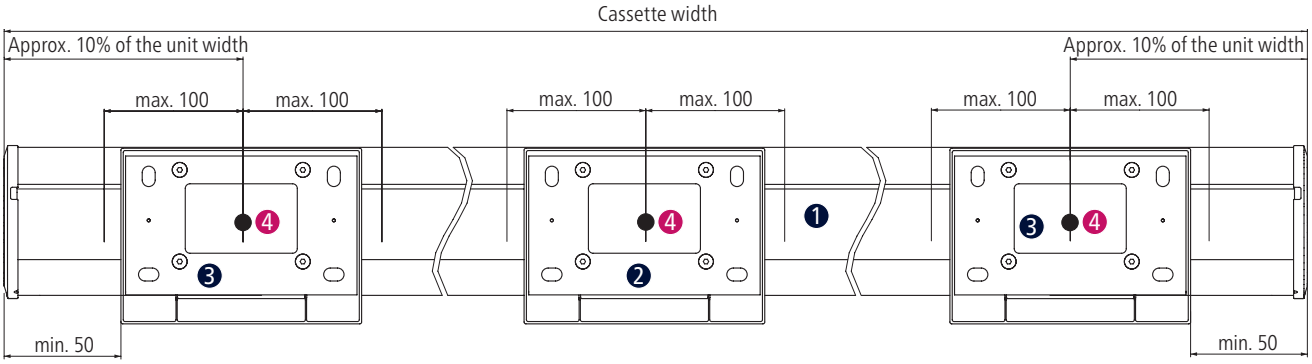

❶ Semina Life cassette ❷ Centre bracket ❸ Wall bracket ❹ Marking points

Minimum spacing distances for installation in the niche (wall mounting)

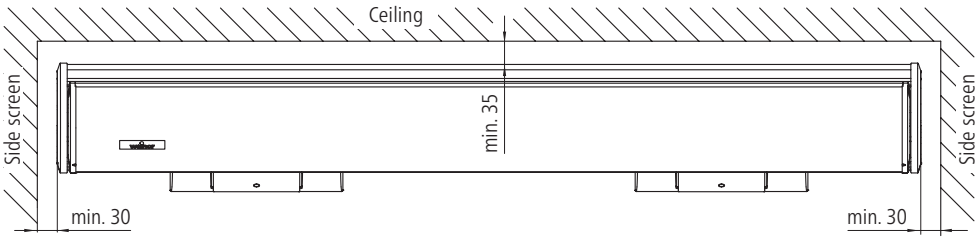

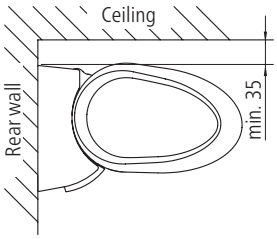

Cross-sections

Semina Life LED

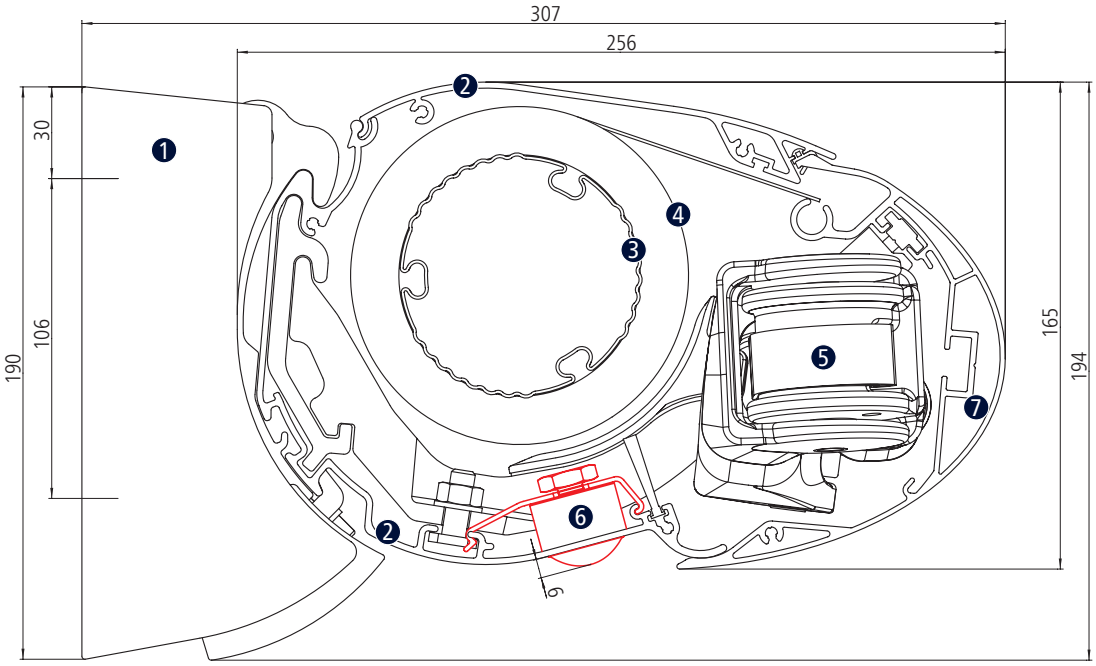

1. Wall bracket
2. Cassette
3. Fabric roller bearing
4. Fabric rolls
5. Spring-tensioned arm
6. LED spotlight
7. Semina Life drop profile

Semina Life VarioShade Valance (cross-section)

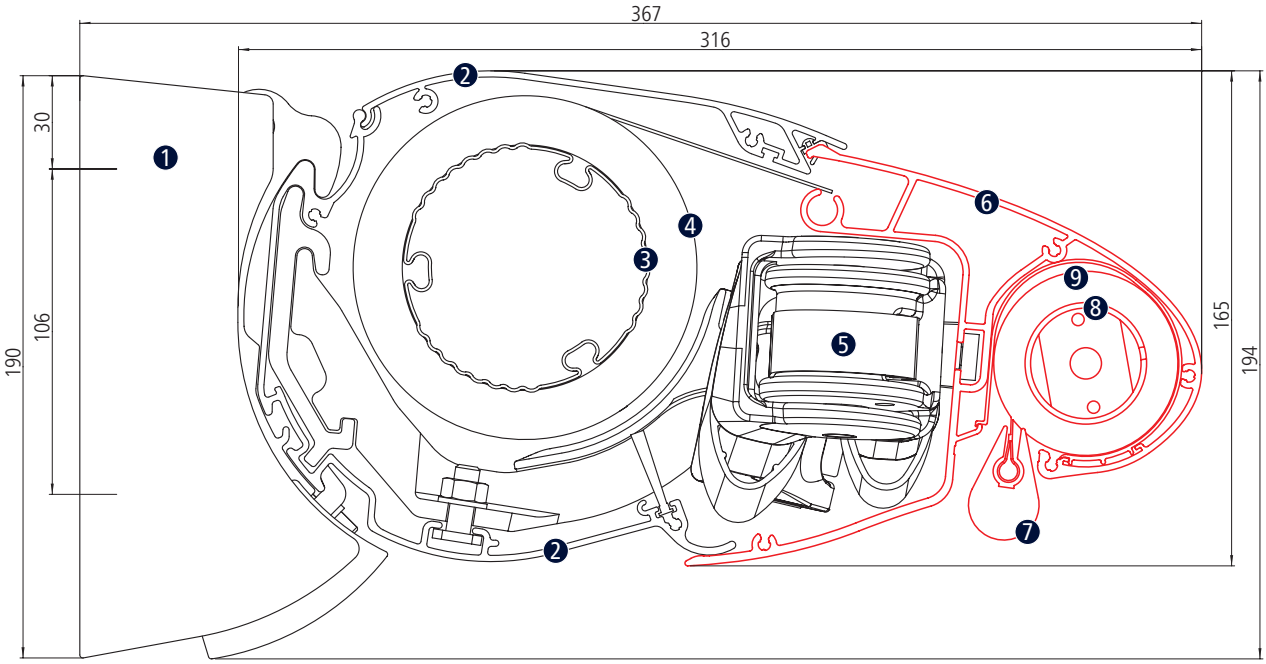

1. Wall bracket
2. Cassette
3. Fabric roller bearing
4. Fabric rolls
5. Spring-tensioned arm
6. VarioShade Valance
7. VarioShade Valance bottom rail
8. VarioShade Valance fabric roller bearing
9. VarioShade Valance fabric rolls

Figures are in mm

Semina Life Installation

Wall mounting – brackets

Wall bracket (with cover)

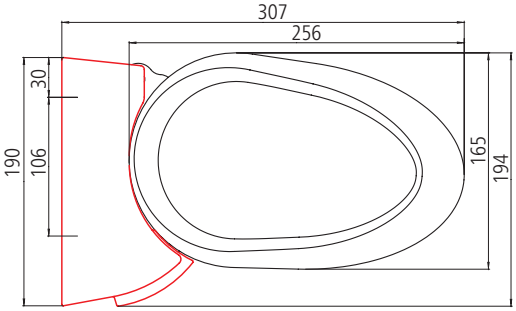

Wall bracket (without cover) 250 mm

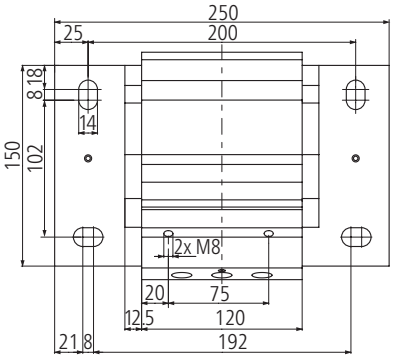

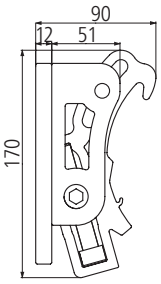

Wall bracket (with cover)

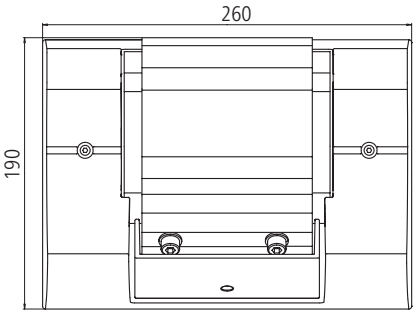

Wall mounting – brackets

Wall bracket (without cover) 430 mm

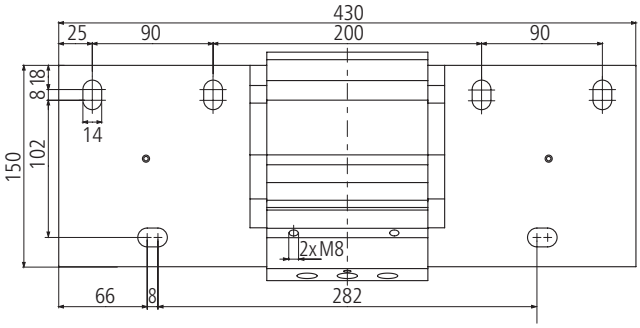

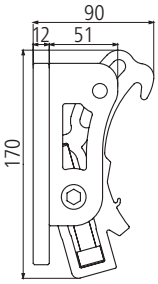

Wall bracket (with cover)

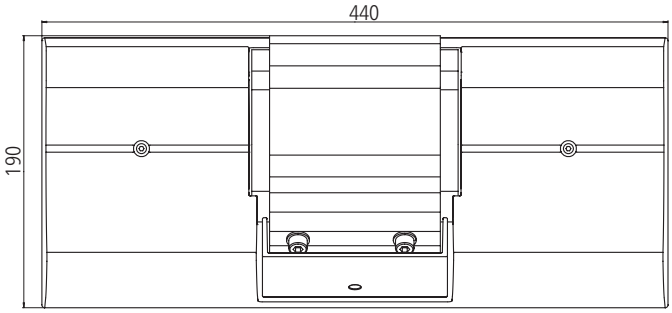

Wall mounting – mounting plates

Mounting plate for wall mounting
660 x 220 x 15 mm

Position of the mounting plates using the Semina Life 500 x 300 cm* as an example.

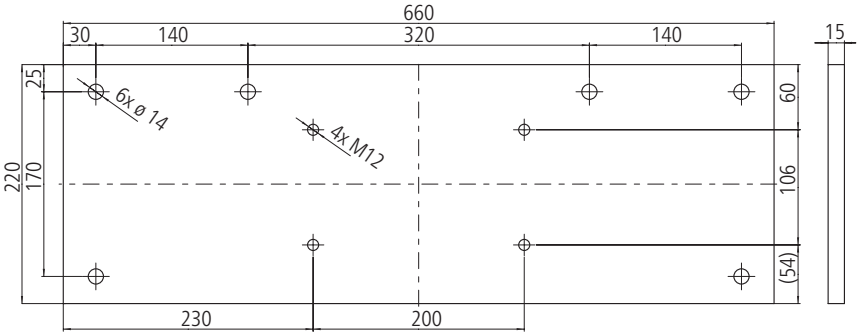

Mounting plate for wall mounting
660 x 390 x 15 mm

Position of the mounting plates using the Semina Life 500 x 300 cm* as an example.

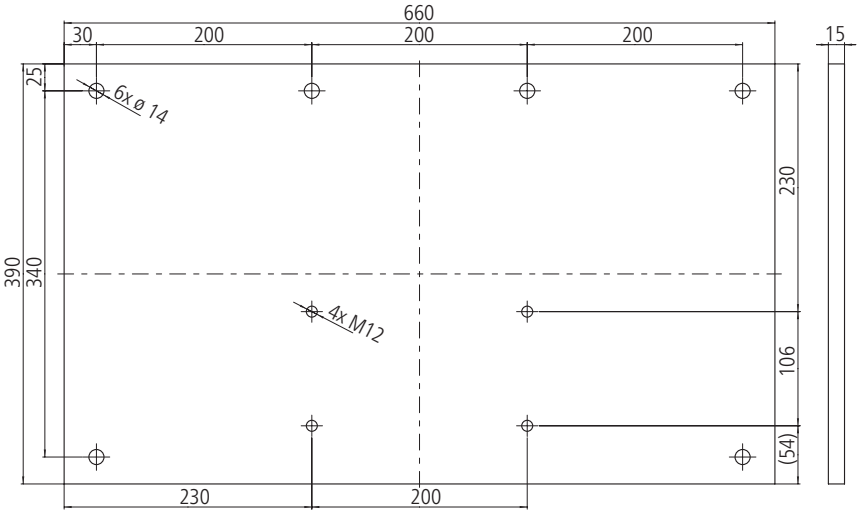

* Depending on the width of the awning, the positioning of the mounting plates may vary.

Mounting plate for centre bracket
370 x 220 x 15 mm

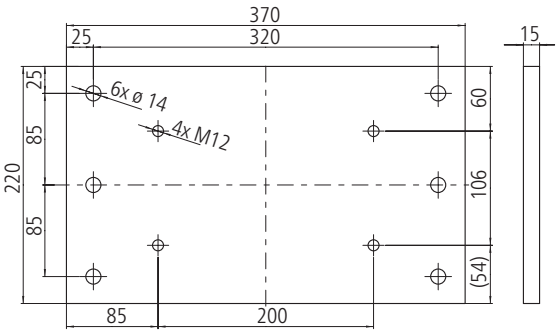

Wall mounting – mounting plates

Roof front plate for wall mounting
540 x 220 x 15 mm

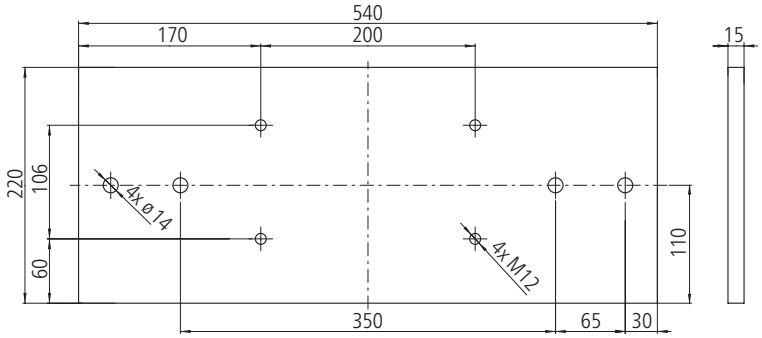

Note for front ceiling mounting:
The indicated extraction forces apply to a storey ceiling with a thickness of at least 160 mm. Here, the fixings are installed exactly in the centre of the storey ceiling, so that there is a minimum upward and downward edge distance of 80 mm. For this mounting type, a lining, e.g. with 150 x 50 mm rectangular pipes, is required. Here, the lower edge of the rectangular pipe must be flush with the lower edge of the storey ceiling.

Installation with stand off bracket (special bracket)

Semina Life with stand off bracket, e.g. to overcome a soil pipe

65 to 300 mm gaps can be bridged using the stand off bracket.

The stand off bracket can be cut to size on site if required. But for a more durable quality and better appearance weinor recommends ordering the bracket to the required dimensions, as it will be fully powder coated leaving no raw edges.

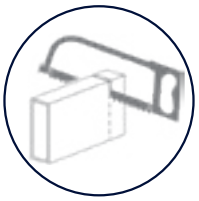

Stand off bracket for wall bracket 260 mm

Stand off bracket with wall bracket 260 mm

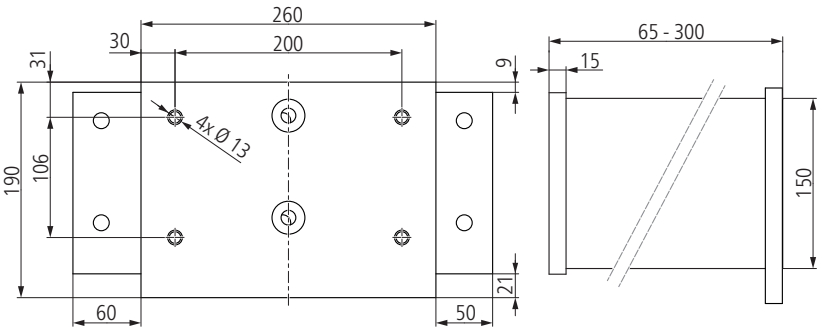

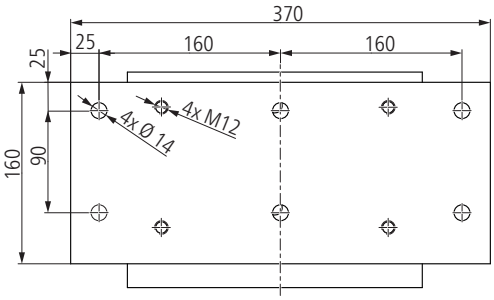

Ceiling mounting

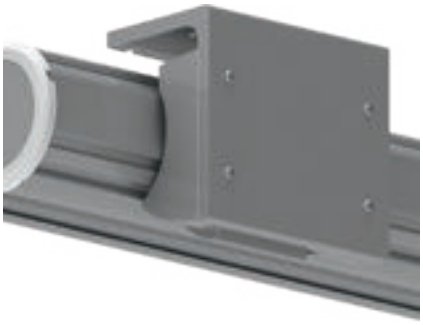

Ceiling bracket

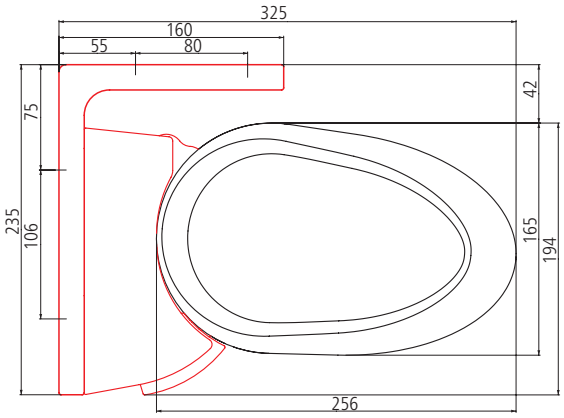

Ceiling bracket (without cover)

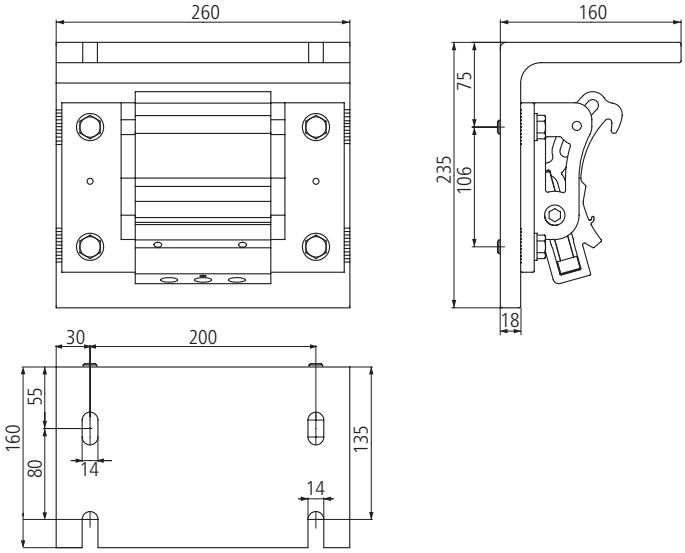

Ceiling bracket (with cover)

Rafter mounting

Rafter bracket

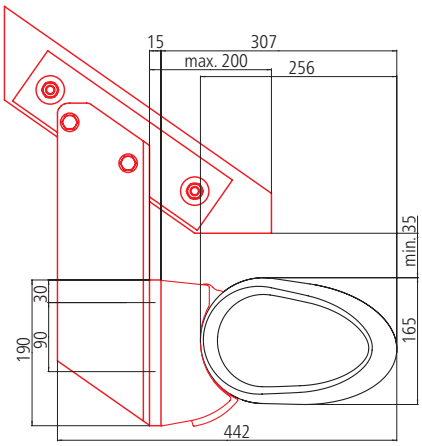

Rafter bracket with mounting plate and wall bracket with cover
weinor recommends using a mounting plate for rafter brackets

Rafter mounting

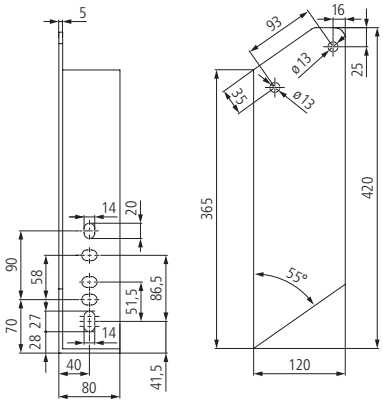

Rafter bracket (right)

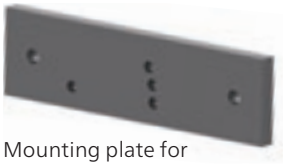

Mounting plate for
294 x 80 x 15 mm
rafter bracket

When using the mounting plate, the material thickness of 15 mm must be taken into account when determining the width.

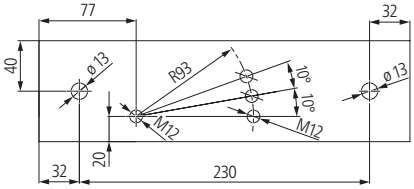

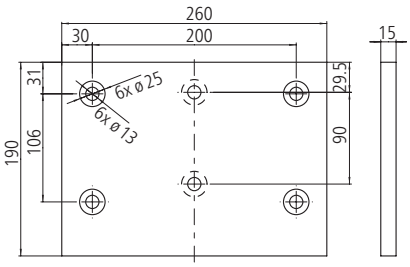

Adaptor plate for rafter bracket
260 x 190 x 15 mm

Bracket positions for rafter mounting

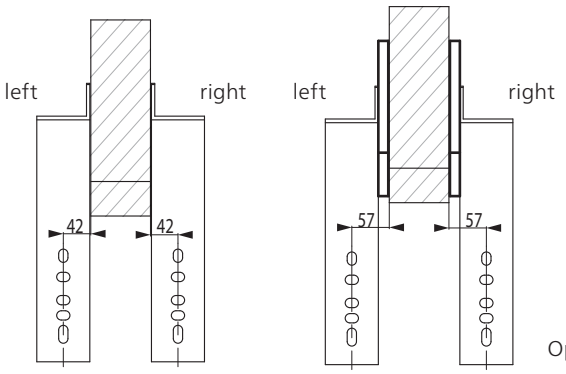

Option without mounting plates

Option with mounting plates

Extraction forces

The extraction force is the force with which the awning weight and the wind load pull on each upper and/or front fixing. The tables indicate this force in N per upper fixing. It varies depending on the awning size and the wall bracket / mounting plate used.

Selecting the wall bracket and anchoring system:

1. Consult relevant table for extraction force per fixing for selected awning size.

2. Select a wall bracket / mounting plate for which there is fixing material which can resist the indicated extraction force. Remember to take into account the spacing, the area which will be damaged if the fixing breaks out, the type of fixing material used and the mounting base.

Use the separate bracket overview for an exact planning of the awning attachment.

Extraction force in N per upper fixing for wall mounting
Brackets **without** mounting plates
Wall mounting with up to 200 mm facing (non-pressure-resistant surface)
Please observe the width to projection dimension limits
For the extraction forces of the VarioShade Valance version, please refer to the console overview!

1 x wall bracket 250 mm
Number of fixings: 8

1 x wall bracket 430 mm
Number of fixings: 12

Please note:
from a width of 551 cm additional 1 x centre bracket 250 mm is required.

Width in cm	Projection in cm					
	150	200	250	300	350	400
200	579					
	290					
250	683	1017				
	341	508				
300	786	1171	1644			
	393	586	822			
350	890	1326	1859	2516		
	445	663	930	1258		
400	993	1480	2074	2800	3562	
	497	740	1037	1400	1781	
450	1097	1635	2289	3085	3925	5582
	548	817	1144	1542	1963	2791
500	1200	1790	2504	3369	4832	6105
	600	895	1252	1684	2416	3052
550	1304	1944	2719	3653	5250	6628
	652	972	1359	1827	2625	3314
600	1407	2099	2933	4427	5669	7150
	704	1049	1467	2213	2835	3575
650	1510	2253	3148	4753	6088	7673
	755	1127	1574	2376	3044	3836

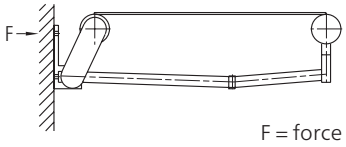

Extraction forces

Extraction force in N per upper fixing for wall mounting
Brackets **with** mounting plates
Wall mounting with up to 200 mm facing (non-pressure-resistant surface)
Please observe the width to projection dimension limits
For the extraction forces of the VarioShade Valance version, please refer to the console overview!

1 x mounting plate
660 x 220 x 15 mm incl.
1 x wall bracket 250 mm
Number of fixings: 12

1 x mounting plate
660 x 390 x 15 mm incl.
1 x wall bracket 250 mm
Number of fixings: 12

1 x roof front plate
540 x 220 x 15 mm incl.
1 x wall bracket 250 mm
Number of fixings: 8

Please note:
from a width of 551 cm additional
1 x wall bracket 250 mm incl.
1 x mounting plate 370 x 220 x 15 mm
as centre bracket is required.
This means an additional 4 fixings will be required,
for roof front plate mounting at 2.

Width in cm	Projection in cm					
	150	200	250	300	350	400
200	183					
	91					
	389					
250	216	320				
	108	160				
	458	680				
300	248	369	517			
	124	184	258			
	527	784	1099			
350	281	417	585	790		
	140	209	292	395		
	597	887	1242	1679		
400	313	466	652	880	1118	
	157	233	326	440	559	
	666	990	1386	1869	2375	
450	346	515	720	969	1232	1751
	173	257	360	484	616	875
	735	1094	1529	2059	2617	3720
500	379	563	787	1058	1516	1915
	189	282	394	529	758	957
	805	1197	1673	2248	3222	4068
550	411	612	855	1147	1648	2078
	206	306	427	574	824	1039
	874	1301	1816	2438	3501	4417
600	444	661	922	1390	1779	2242
	222	330	461	695	890	1121
	943	1404	1960	2954	3781	4765
650	477	709	990	1493	1910	2406
	238	355	495	746	955	1203
	1013	1507	2103	3172	4060	5113

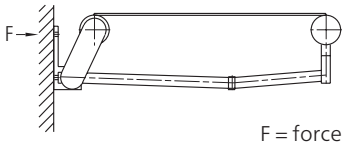

Extraction forces / Shear forces

Extraction force in N per front fixing for ceiling mounting

Please observe the width to projection dimension limits

For the extraction forces of the VarioShade Valance version, please refer to the console overview!

1 x ceiling angle incl.
1 x wall bracket 250 mm
Number of fixings: 8

Please note:
from a width of 551 cm additional
1 x ceiling angle incl.
1 x wall bracket 250 mm
as centre bracket is required.
This means an additional 4 fixings will be required.

Width in cm	Projection in cm					
	150	200	250	300	350	400
200	547					
250	638	920				
300	729	1054	1453			
350	821	1188	1638	2194		
400	912	1322	1823	2437	3080	
450	1003	1456	2007	2680	3389	4783
500	1094	1590	2192	2923	4151	5227
550	1185	1724	2377	3166	4507	5670
600	1246	1827	2529	3781	4827	6076
650	1335	1959	2711	4057	5181	6518

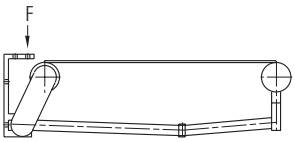

F = force

Shear forces in N per fixing for rafter mounting

Please observe the width to projection dimension limits

For the extraction forces of the VarioShade Valance version, please refer to the console overview!

1 x rafter bracket with
1 x adapter plate for rafter bracket incl.
1 x wall bracket 250 mm,
one left, one right for each

1 x rafter bracket with
1 x mounting plate for rafter with
1 x adapter plate for rafter bracket incl.
1 x wall bracket 150 mm,
one left, one right for each

Please note:
from a width of 551 cm additional
1 x rafter bracket with
1 x adapter plate for rafter bracket incl.
1 x centre bracket 250 mm,
one left, one right for each,
as centre bracket is required.

Width in cm	Projection in cm					
	150	200	250	300	350	400
200	1543					
	708					
250	1805	2592				
	821	1142				
300	2068	2975	4087			
	934	1304	1757			
350	2330	3358	4611	6152		
	1047	1466	1976	2604		
400	2593	3740	5134	6838	8612	
	1160	1627	2195	2889	3609	
450	2855	4123	5658	7523	9479	13360
	1274	1789	2414	3173	3968	5542
500	3117	4505	6181	8208	11636	14602
	1387	1951	2633	3458	4847	6052
550	3380	4888	6705	8893	12636	15843
	1500	2113	2852	3742	5259	6562
600	3581	5207	7163	10675	13566	17011
	1552	2212	3005	4429	5601	6997
650	3840	5586	7682	11456	14563	18248
	1661	2370	3220	4750	6008	7503

In the case of rafter mounting, the fixings are included in the order.
weinor recommends the use of rafter brackets with mounting plate!

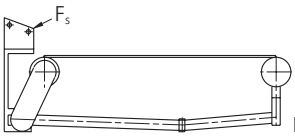

F_s = Shear force